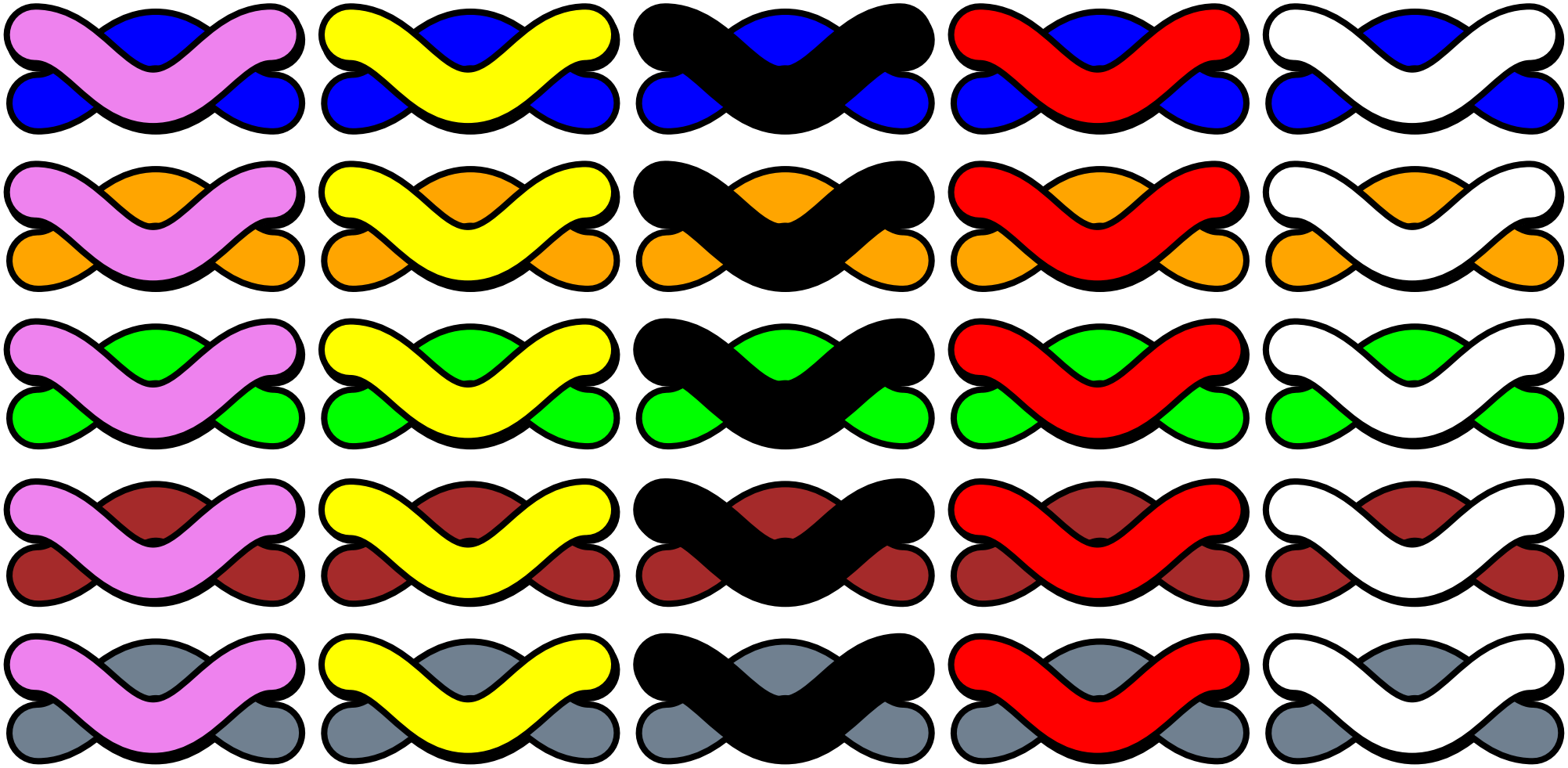

Spectroscopy Workshop

CTM.10 OVERLAP 01-06.02.2010

XOR

Modulator

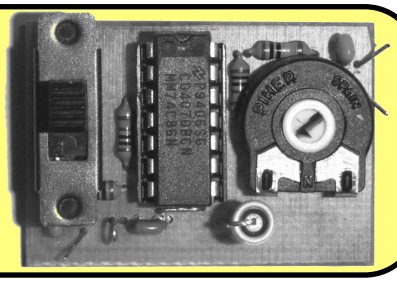

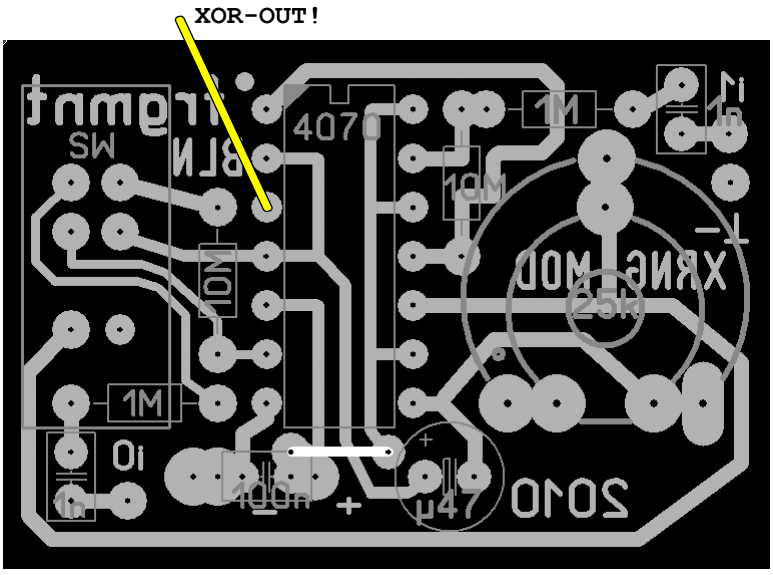

4011 Quad NAND

NAND

A	B	A⊕B
0	0	1
0	1	1
1	0	1
1	1	0

4011

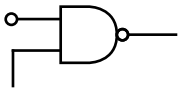

+V inverts the Input
GND look Table

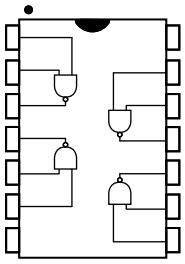

4077 Quad XNOR

XNOR

A	B	A⊕B
0	0	1
0	1	0
1	0	0
1	1	1

4077

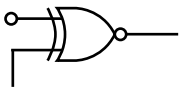

GND inverts
+V does not invert

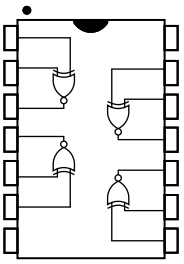

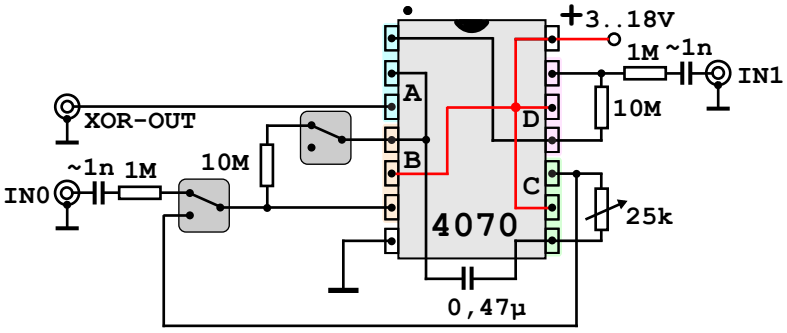

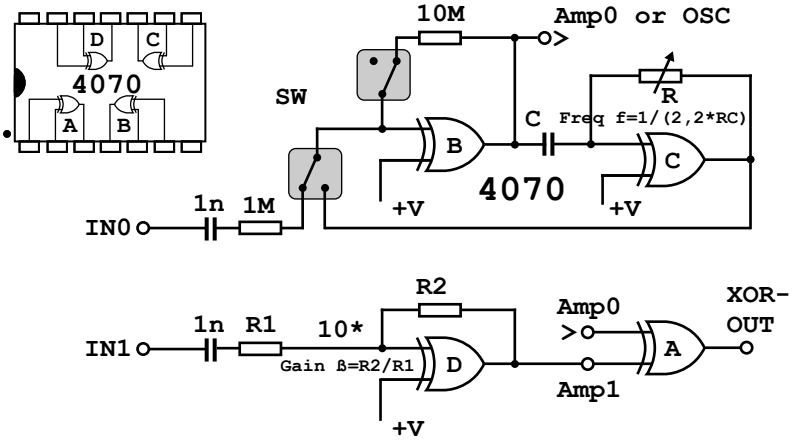

Switch States: 2 x XOR-Oscillator
1 x XOR-Amp / 1 x XOR off

->Features: 1 Internal Oscillator
1 or 2 Inputs with "Amps"

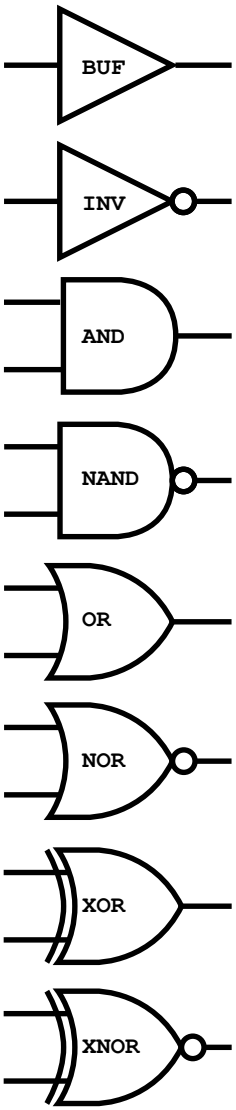

4070 Quad XOR

XOR

A	B	A⊕B
0	0	0
0	1	1
1	0	1
1	1	0

4070

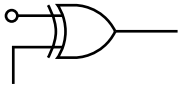

+V inverts the Input
GND does not invert

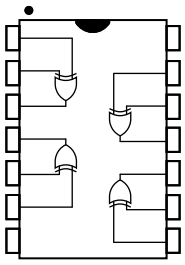

XOR RNG MOD
CTM, Berlin, D
tob.de.vu / 2010
X Objct Bhvirs

creative commons
BY: NC SA
Creative Commons License: BY-NC-SA v3.0 German

INV

Amplifier

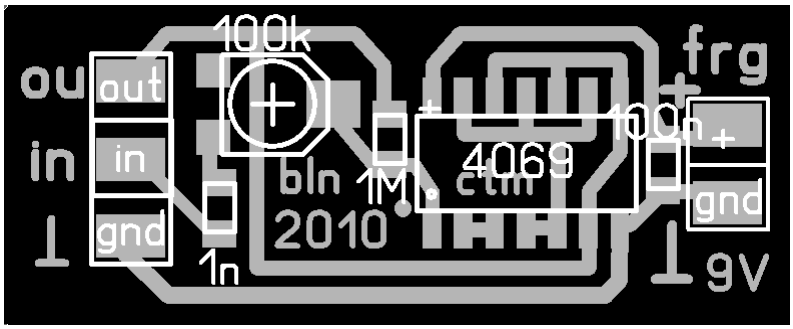

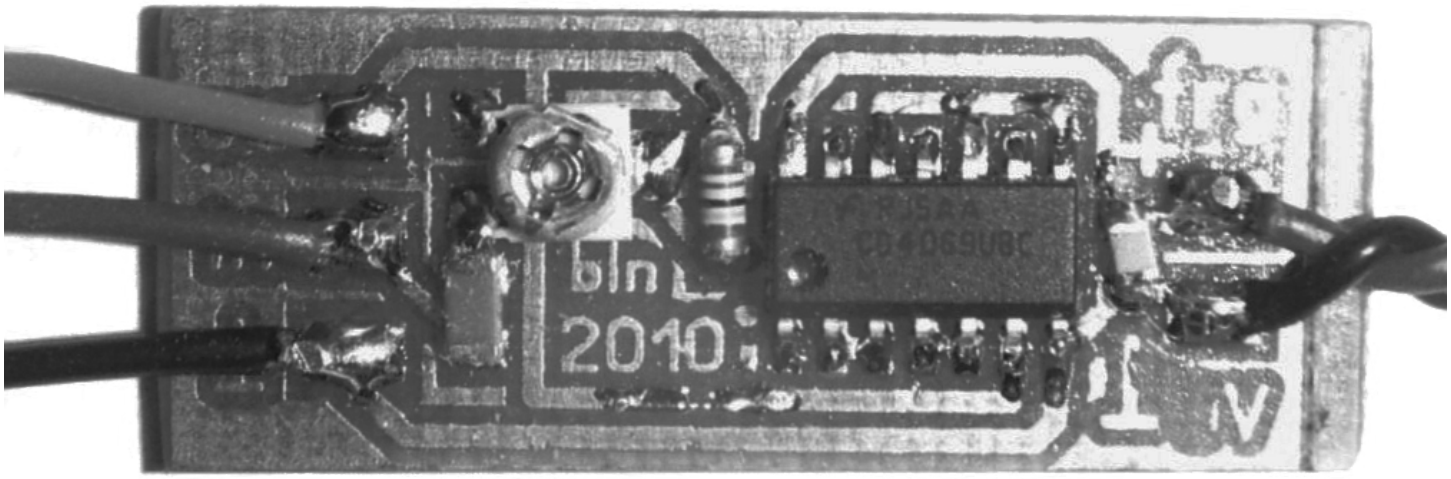

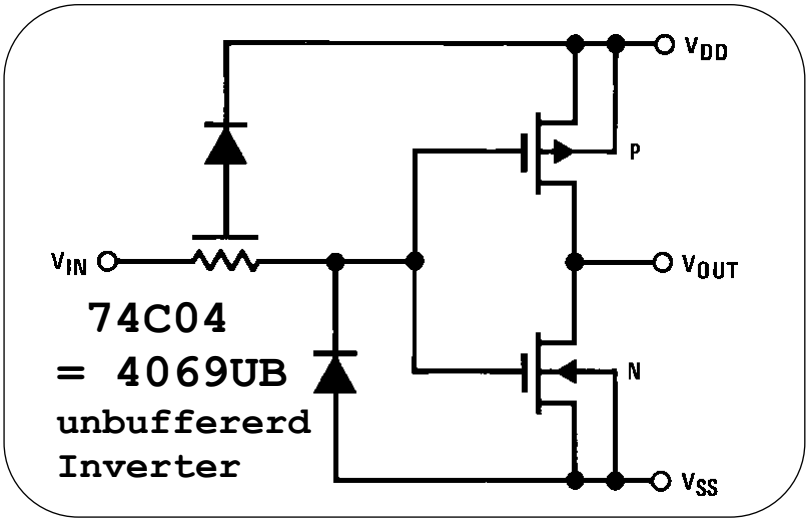

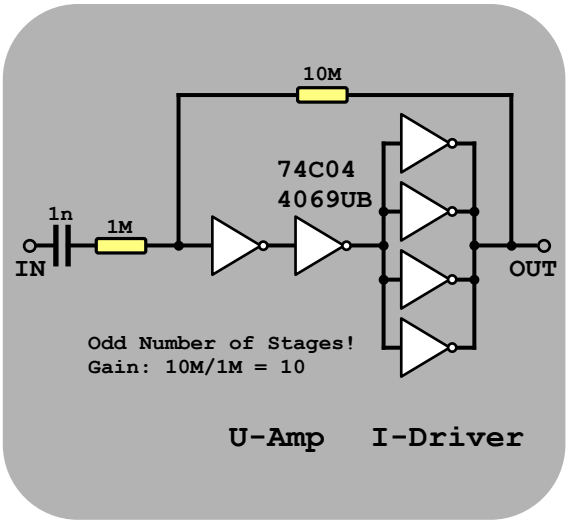

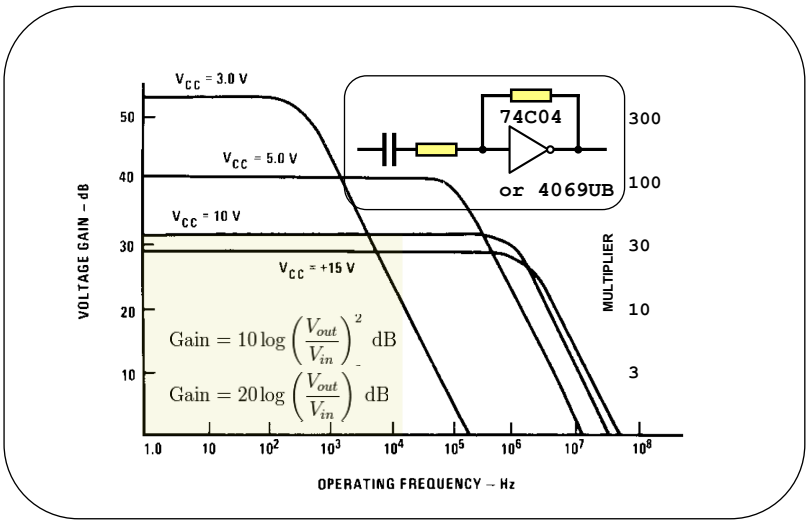

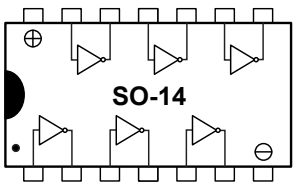

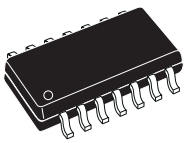

INF Amp SMD
CTM, Berlin, D
tob.de.vu / 2010
X Objct Bhvirs

creative commons
BY: NC SA
Creative Commons License: BY-NC-SA v3.0 German

FET-PreAmp SMD 2010

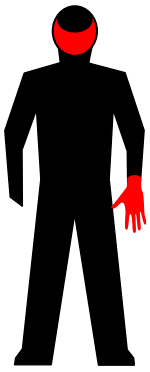

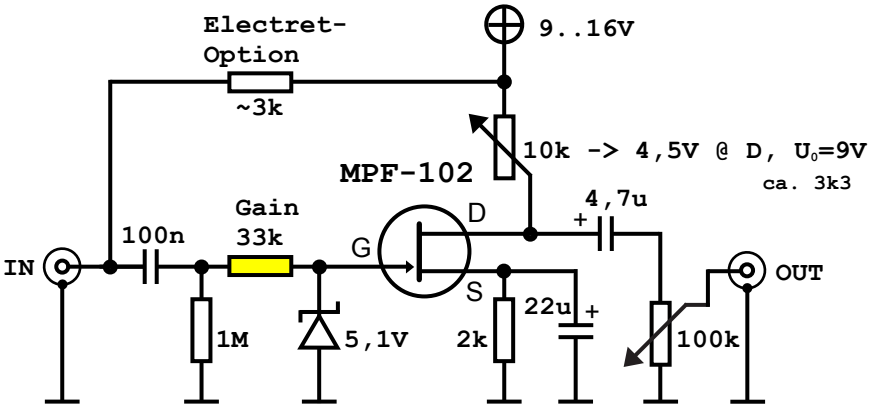

Some schematic,
just a different Style:

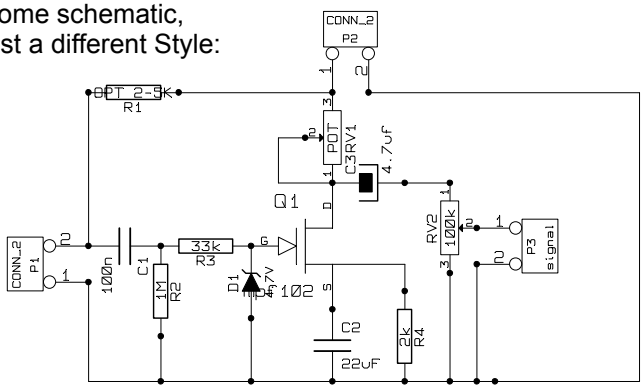


```
1   x 10..22k  lin Pot
1   x 100k      lin Pot

1   x 2k = 2 x 1k
1   x 33k
1   x 1M

1   x 4u7  Elco
1   x 22uF Elco

1   x MPF 102 FET

1   x 5V1 Zener diode

1   x PCB single sided
```

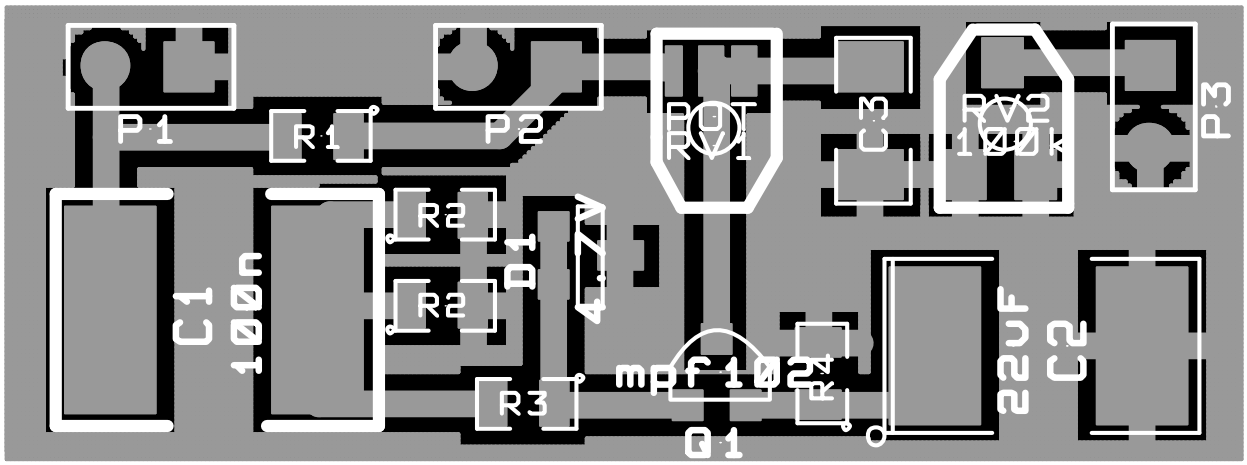

0 1 2 3 4 5 6 7 8 9

BK LA | BR OW | RE D | OR AG | YE LW | GN RE | BL UE | VI OL | GY RE | WH IT

FET-PreAmp SMD 2010
PRELIMINARY GRAPH for CTM, Berlin
tob.de.vu / 2010
Transmitting Object Behaviors

creative commons
BY: $ ↻
Creative Commons License: BY-NC-SA v3.0 German

VLF-Detector

Very Low Frequency

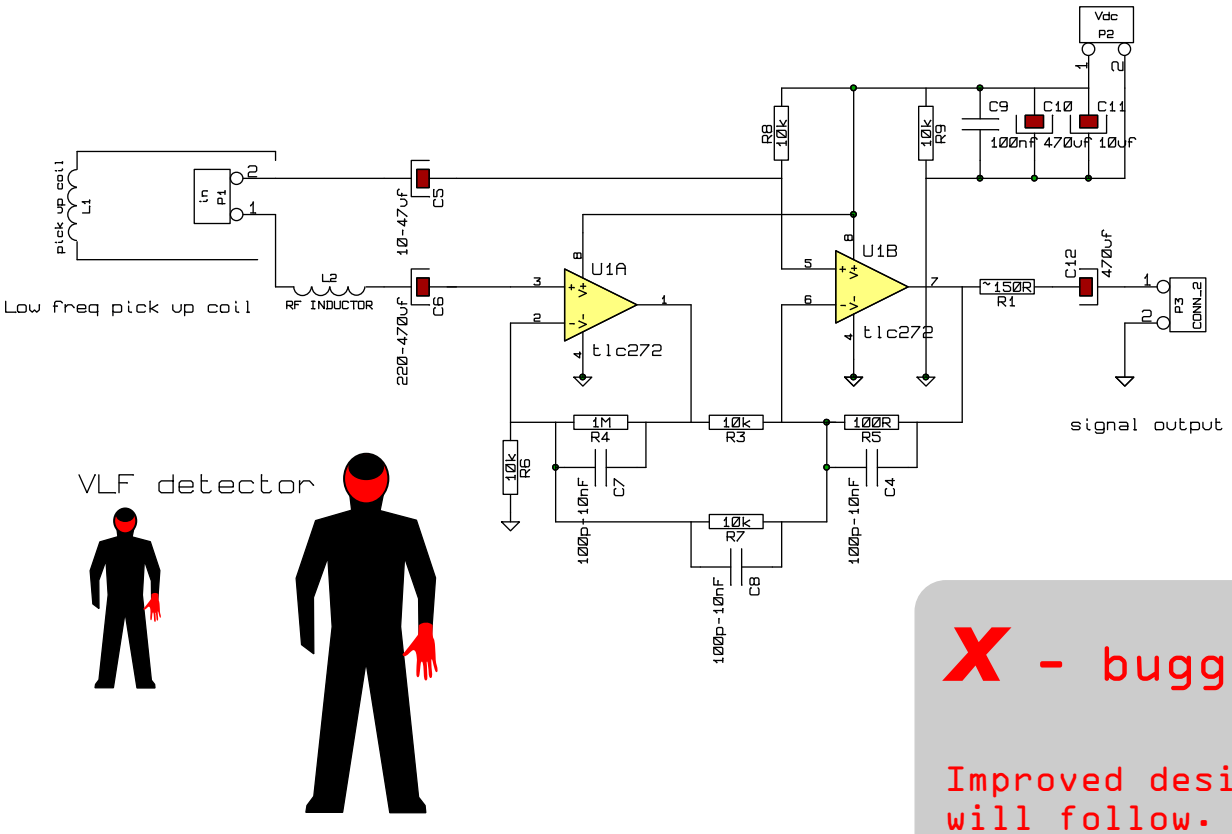

X - buggy!

Improved design will follow.

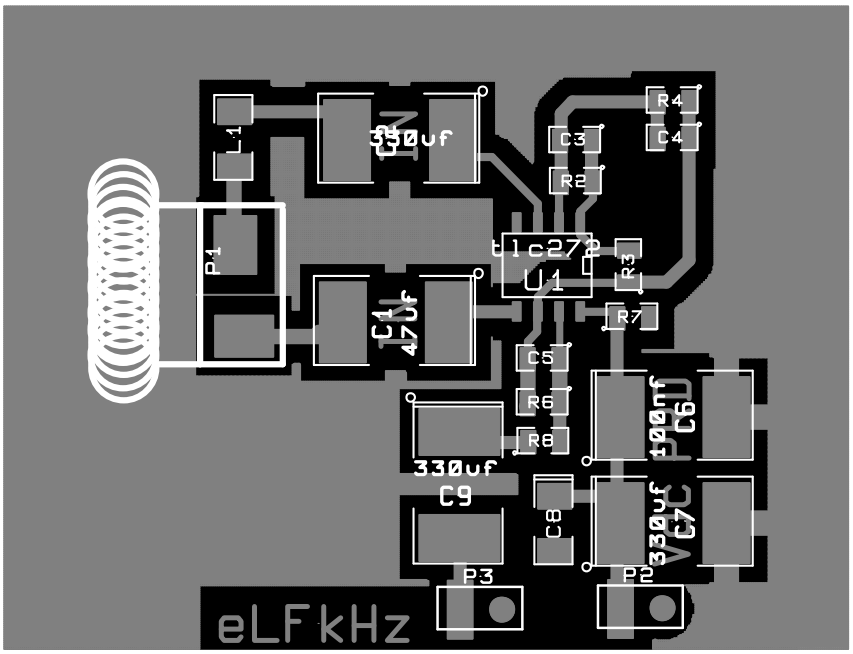

0	1	2	3	4	5	6	7	8	9
BK LA	BR OW	RE D	OR AG	YE LW	GN RE	BL UE	VI OL	GY RE	WH IT

VLF-Detector SMD 2010

PRELIMINARY GRAPH for CTM, Berlin

tob.de.vu / 2010

Transmitting Object Behaviors

creative commons
Creative Commons License: BY-NC-SA v3.0 German

OPTO

Amplification of Photocurrent

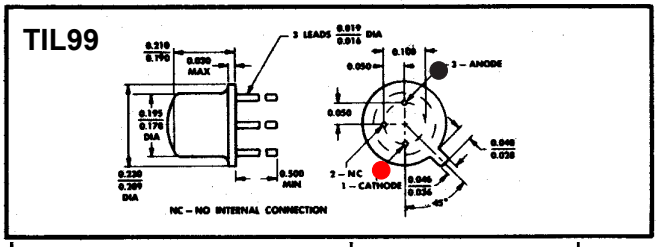

Device Type	Type	Light Current min. mA	Light Current max. mA @ V	Dark Current max. nA @ V	Power Diss mW
TIL99	As Phototransistor	1	— 5	100 10	250
	As Photodiode	40* µA typ	— 0–50	10 10	250

4049UB oldschool Inverter

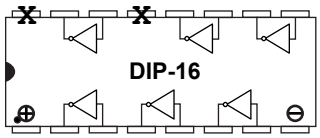

74HC14 etc SchmittTrigger

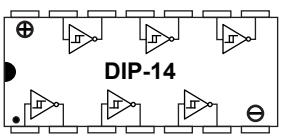

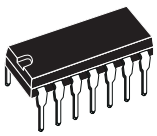

From **BPW40** datasheet:

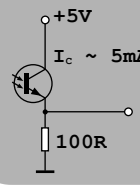

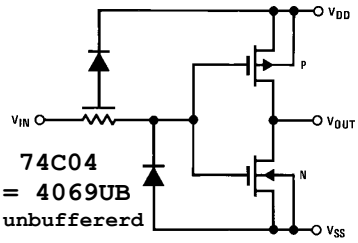

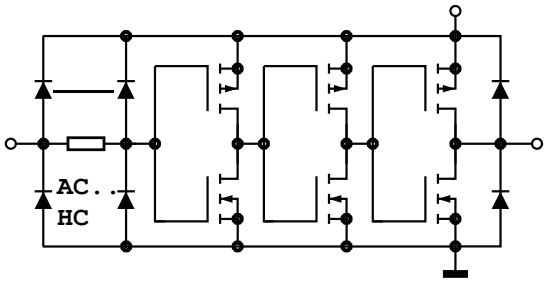

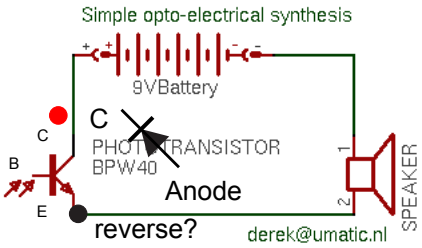

Photodiode:

Under forward bias, conventional current will pass from the anode to the cathode, following the arrow in the symbol. Photocurrent flows in the opposite direction.

Unwanted photodiodes

Since transistors and ICs are made of semiconductors, and contain P-N junctions, almost every active component is potentially a photodiode. Many components, especially those sensitive to small currents, will not work correctly if illuminated, due to the induced photocurrents. In most components this is ***not desired***, so they are placed in an opaque housing. Since housings are not completely opaque to X-rays or other high energy radiation, these can still cause many ICs to ***malfunction*** due to induced photo-currents.

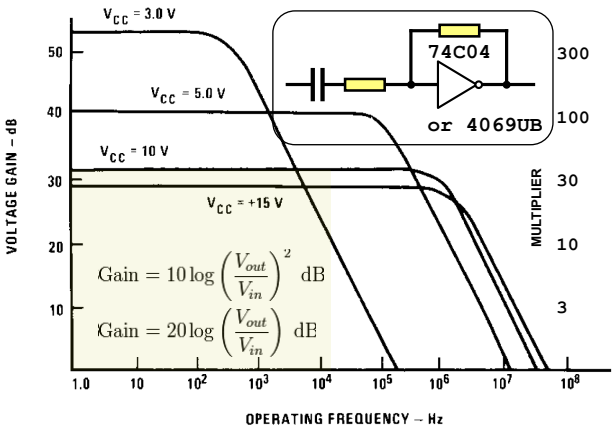

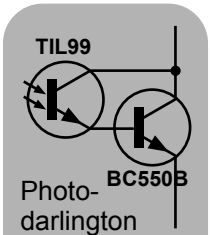

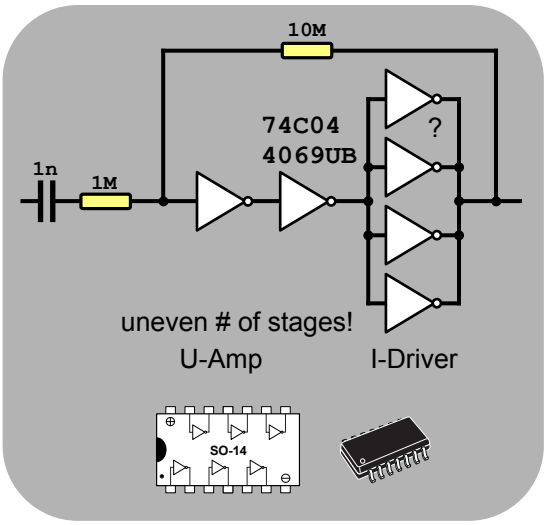

Single Supply OpAmp Buffer Circuit

Improved Replacement
for TLC272, TLC277

Rail-To-Rail Input

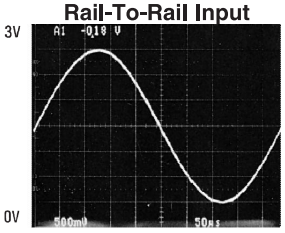

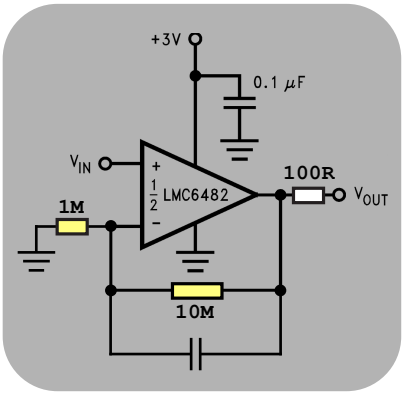

Rail-To-Rail Output

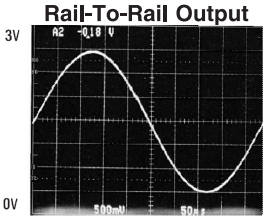

TS912 Rail-to-Rail OpAmp

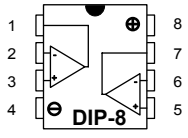

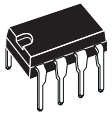

creative commons
BY: $ ↻
Creative Commons License: BY-NC-SA v3.0 German

Optical Receiver

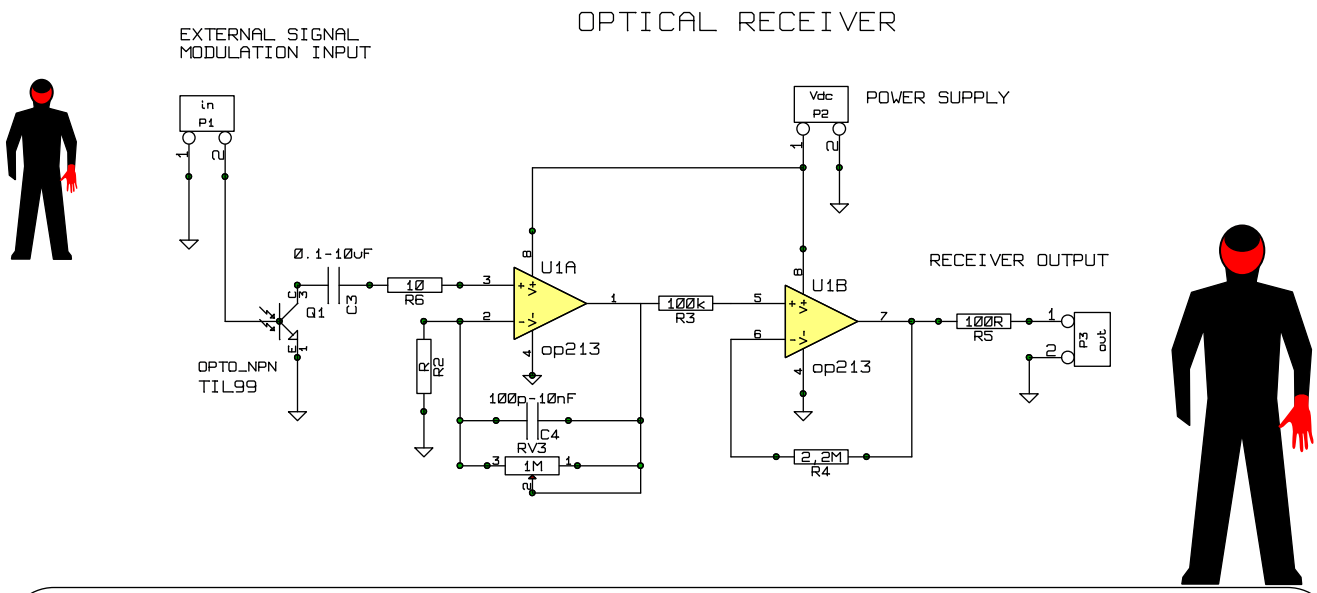

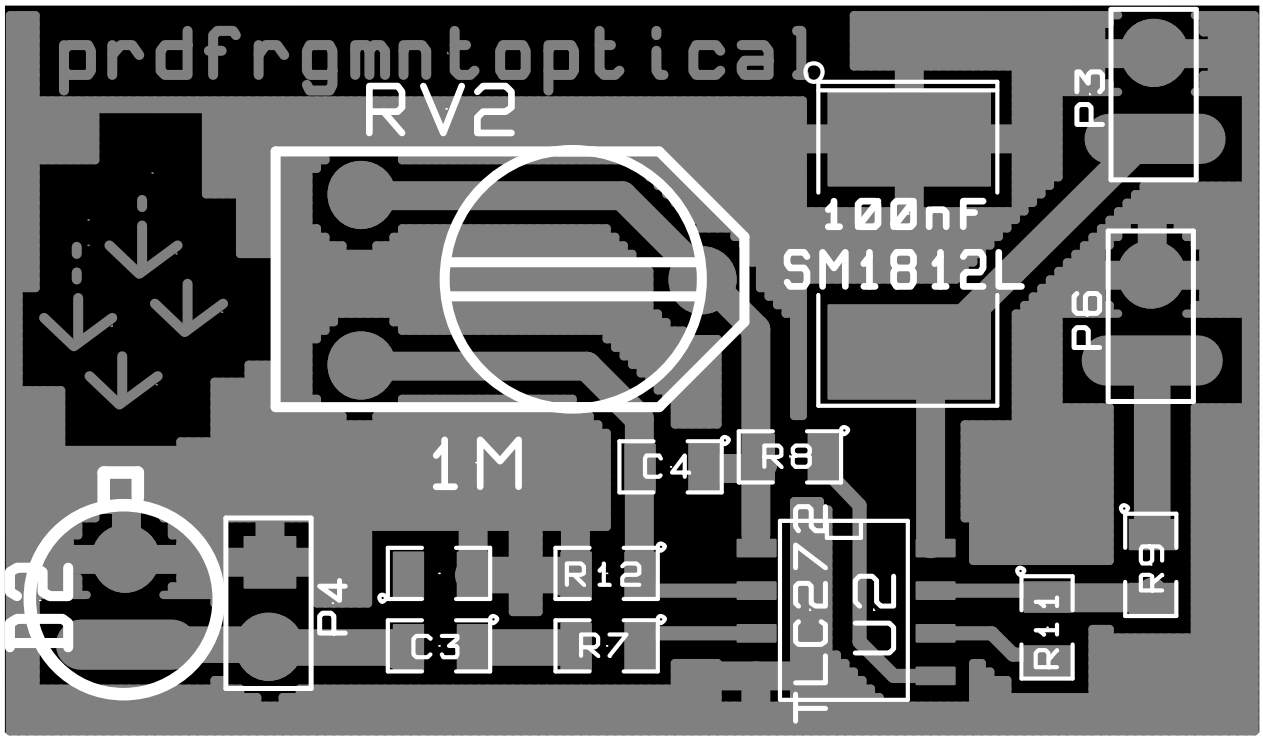

0 1 2 3 4 5 6 7 8 9

BK LA BR OW RE D OR AG YE LW GN RE BL UE VI OL GY RE WH IT

Optical Receiver SMD 2010
PRELIMINARY GRAPH for CTM, Berlin
tob.de.vu / 2010
Transmitting Object Behaviors

creative commons
BY: $ ↻
Creative Commons License: BY-NC-SA v3.0 German

Ultrasonic Detector

30..60 kHz FAULTY Design

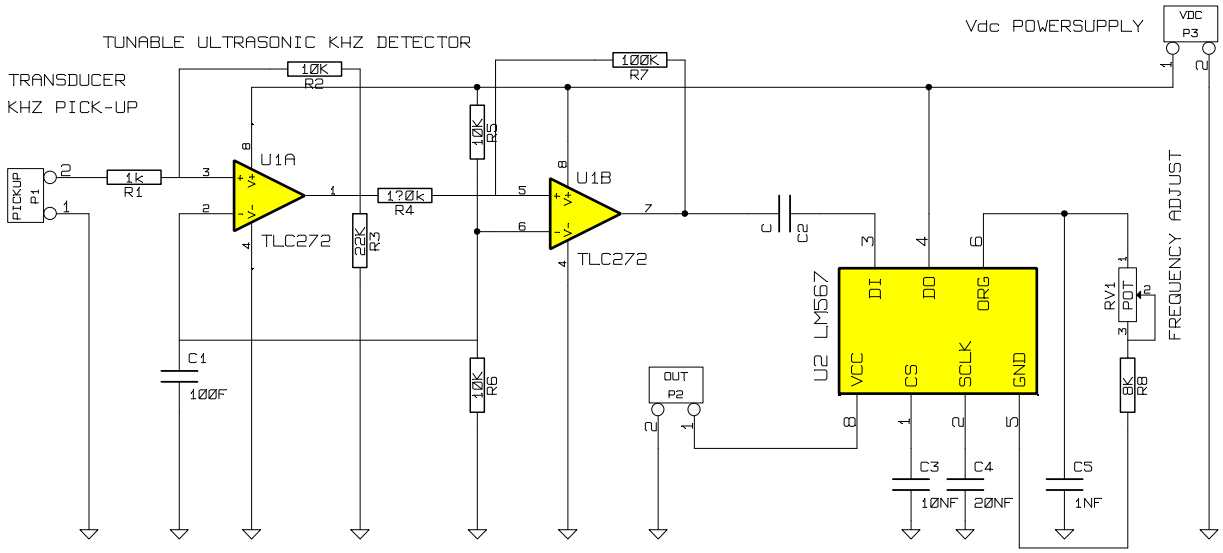

C1 100nF
C2 C SM0805
C3 10NF
C4 20NF
C5 1NF output
P1 PICKUP / ultrasonic transducer
P2 OUT
P3 VDC powersupply
R1 1k
R2 10K
R3 22K
R4 1?0k
R5 10K
R6 10K
R7 100K
R8 8K
RV1 POT
U1 TLC272
U2 LM567

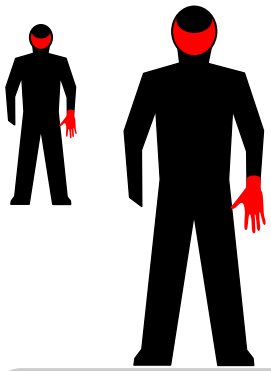

X - buggy!

Improved design will follow.

R Resistor [Ohm] C Capacitor [Farad]
U Integrated circuit P Pin/Plug

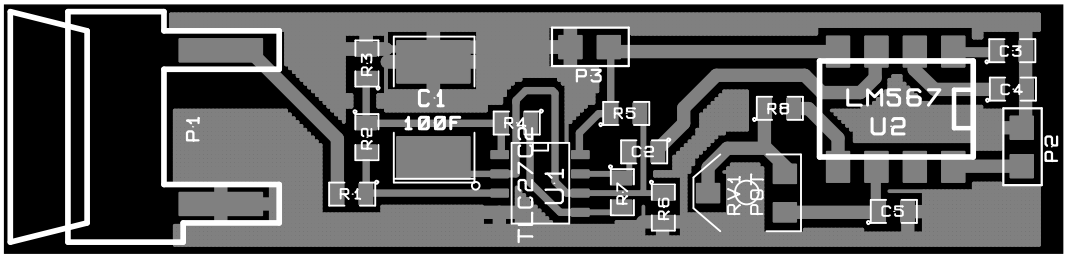

0	1	2	3	4	5	6	7	8	9
BK LA	BR OW	RE D	OR AG	YE LW	GN RE	BL UE	VI OL	GY RE	WH IT

Ultrasonic Det SMD 2010
PRELIMINARY GRAPH for CTM, Berlin
tob.de.vu / 2010
Transmitting Object Behaviors

creative commons
BY: $ ↻
Creative Commons License: BY-NC-SA v3.0 German

386 PwrAmp SMD 2010

1 * LM 386
1 * 10k Poti
2 * 10R
2 * 100n Ceramic Cap
1 * 10µ ElCap
2 * 100µ ElCap
1 * 470µF ElCap

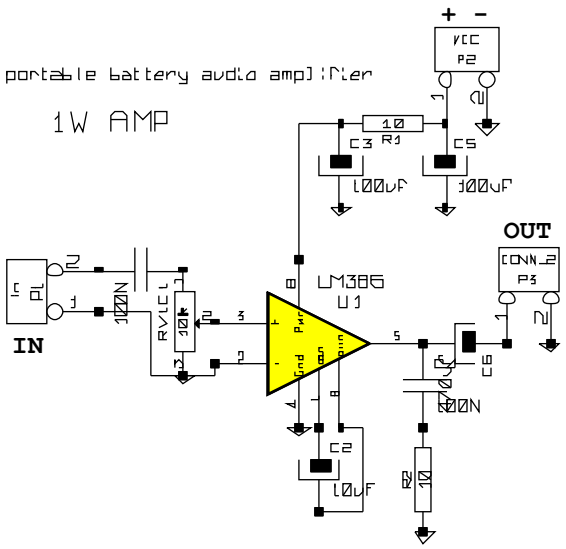

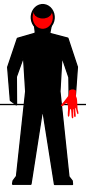

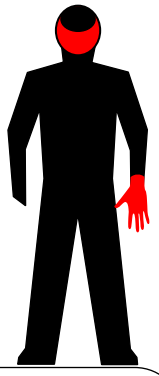

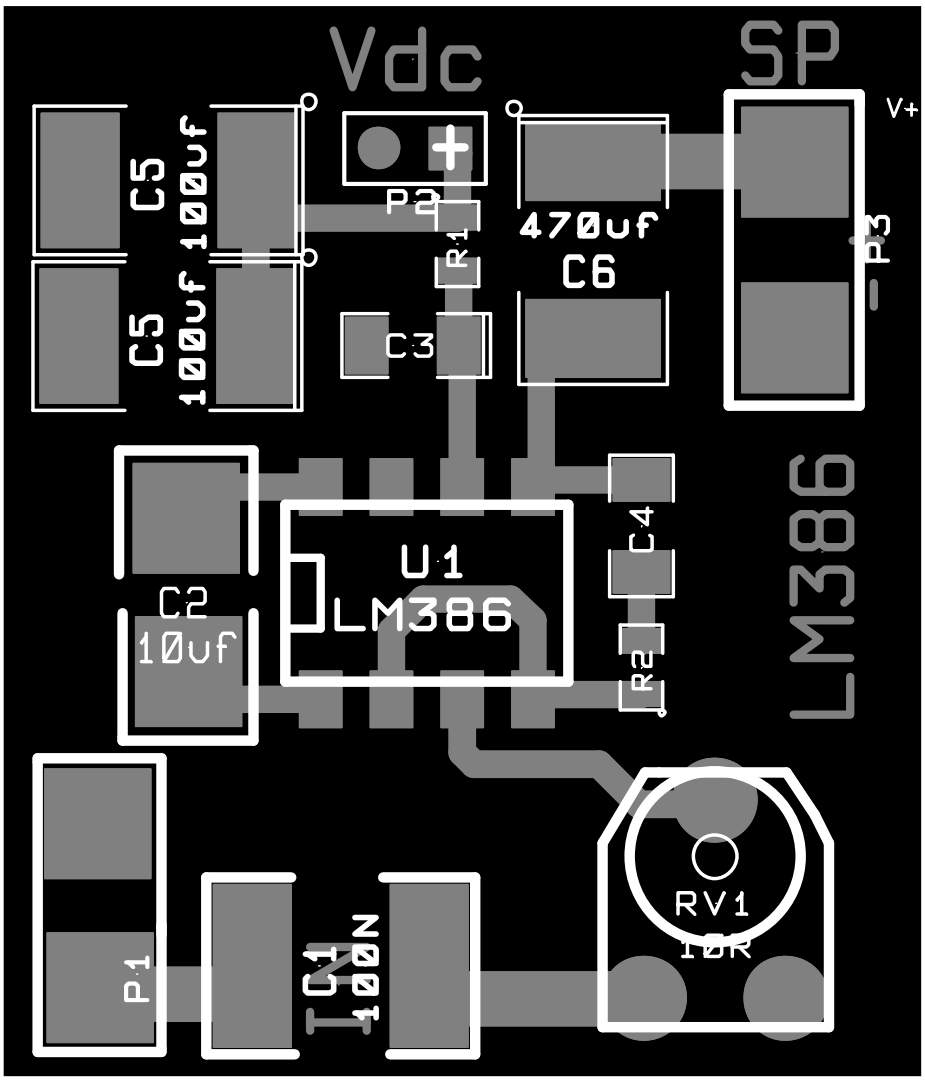

0	1	2	3	4	5	6	7	8	9
BK LA	BR OW	RE D	OR AG	YE LW	GN RE	BL UE	VI OL	GY RE	WH IT

386 PwrAmp SMD 2010
PRELIMINARY GRAPH for CTM, Berlin
tob.de.vu / 2010
Transmitting Object Behaviors

creative commons
BY: NC SA
Creative Commons License: BY-NC-SA v3.0 German

fm-tRANS

Alternative Design

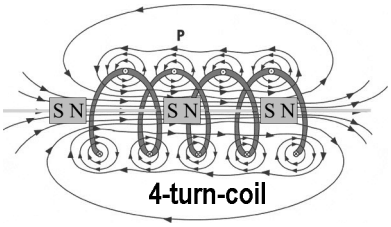

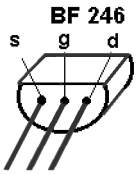

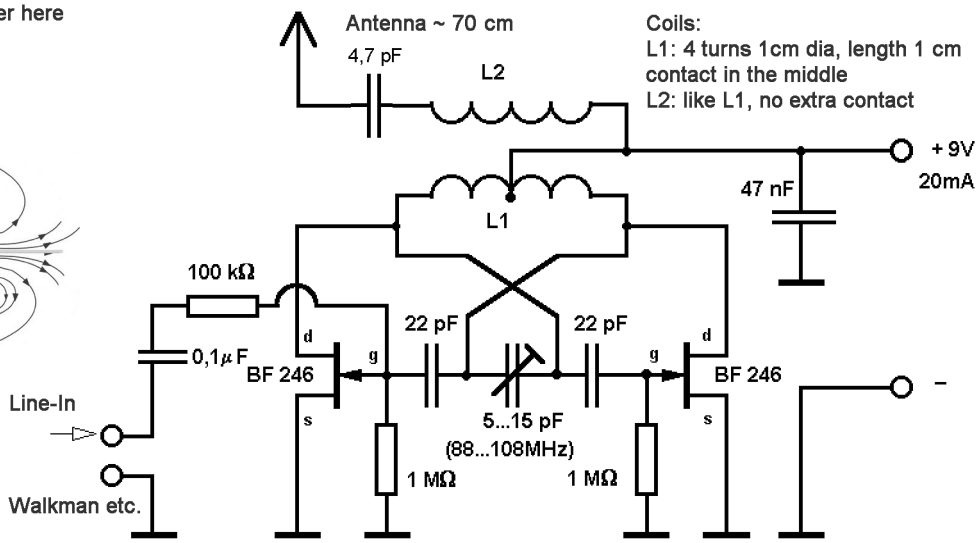

Partslist:

BF 246	Transistor:	2
1M	Resistor:	2
100k	Resistor:	1
4,7pF	Ceramic Capacitor:	1
22pF	Ceramic Capacitor:	2
47nF	Foil Capacitor*:	1
100nF	Foil Capacitor*:	1
9V connector:		1
silverplated wire		
circuit board, pcb:		1
3..30pF	**variable Capacitor**	**1**

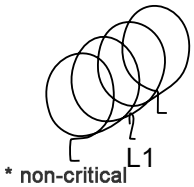

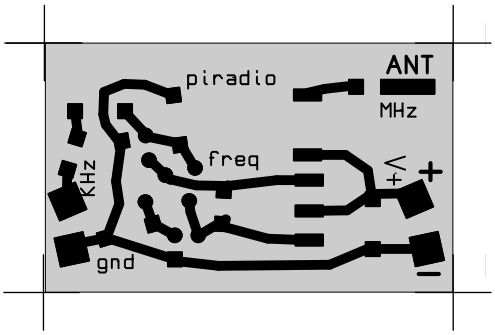

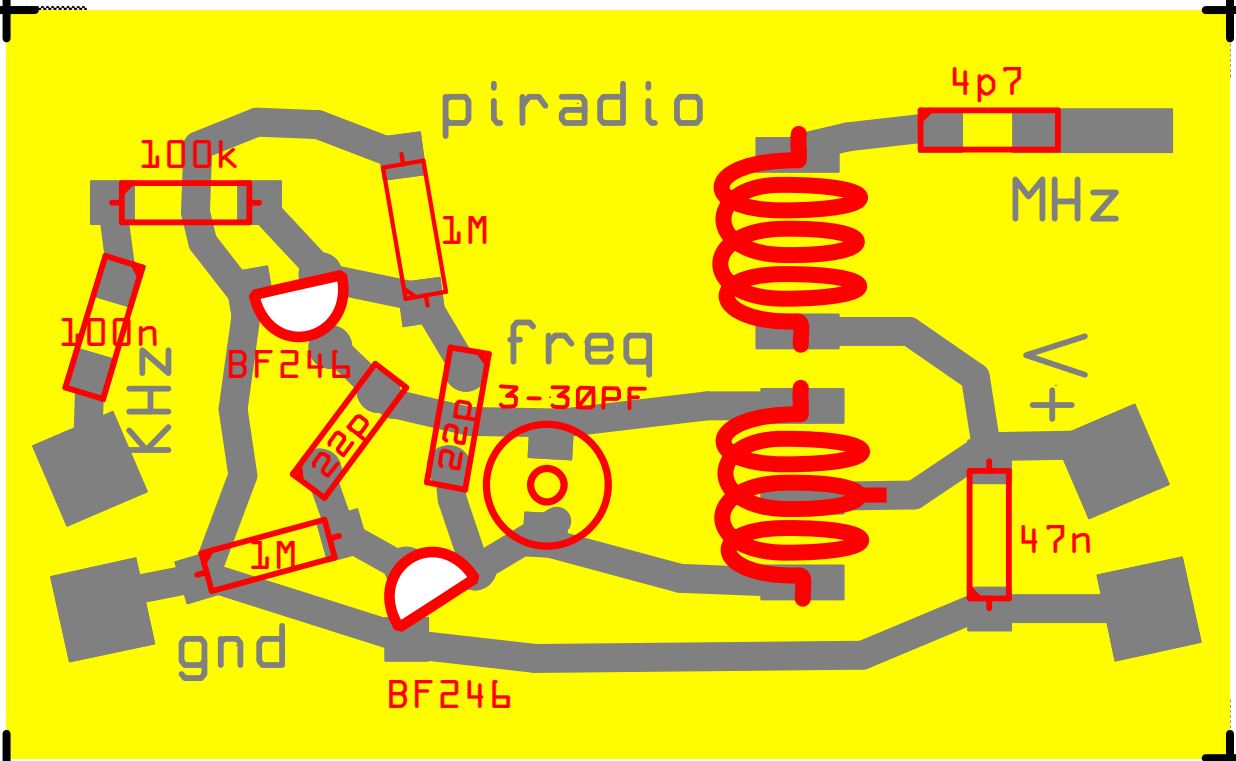

fm-tRANS 2010
PRELIMINARY GRAPH for CTM Berlin, D
Jo frgmnt Grys / tob.de.vu / 2010
Transmitting Object Behaviors

creative commons
BY: NC SA
Creative Commons License: BY-NC-SA v3.0 German

fm-tRANS

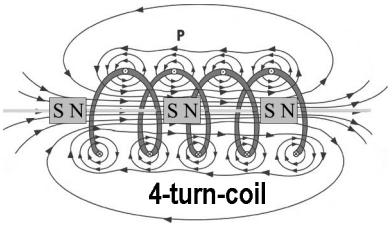

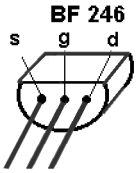

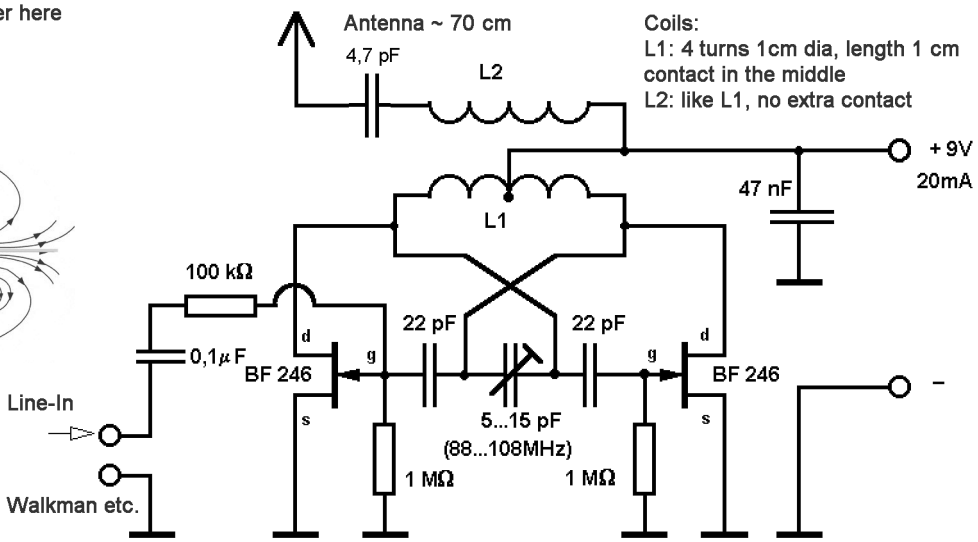

Partslist:

BF 246	Transistor:	2
1M	Resistor:	2
100k	Resistor:	1
4,7pF	Ceramic Capacitor:	1
22pF	Ceramic Capacitor:	2
47nF	Foil Capacitor*:	1
100nF	Foil Capacitor*:	1
9V connector:		1
silverplated wire		
circuit board, pcb:		1
5..25pF	**variable Capacitor**	**1**

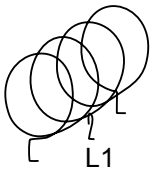

* non-critical

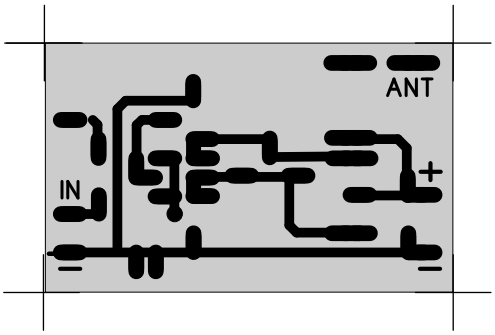

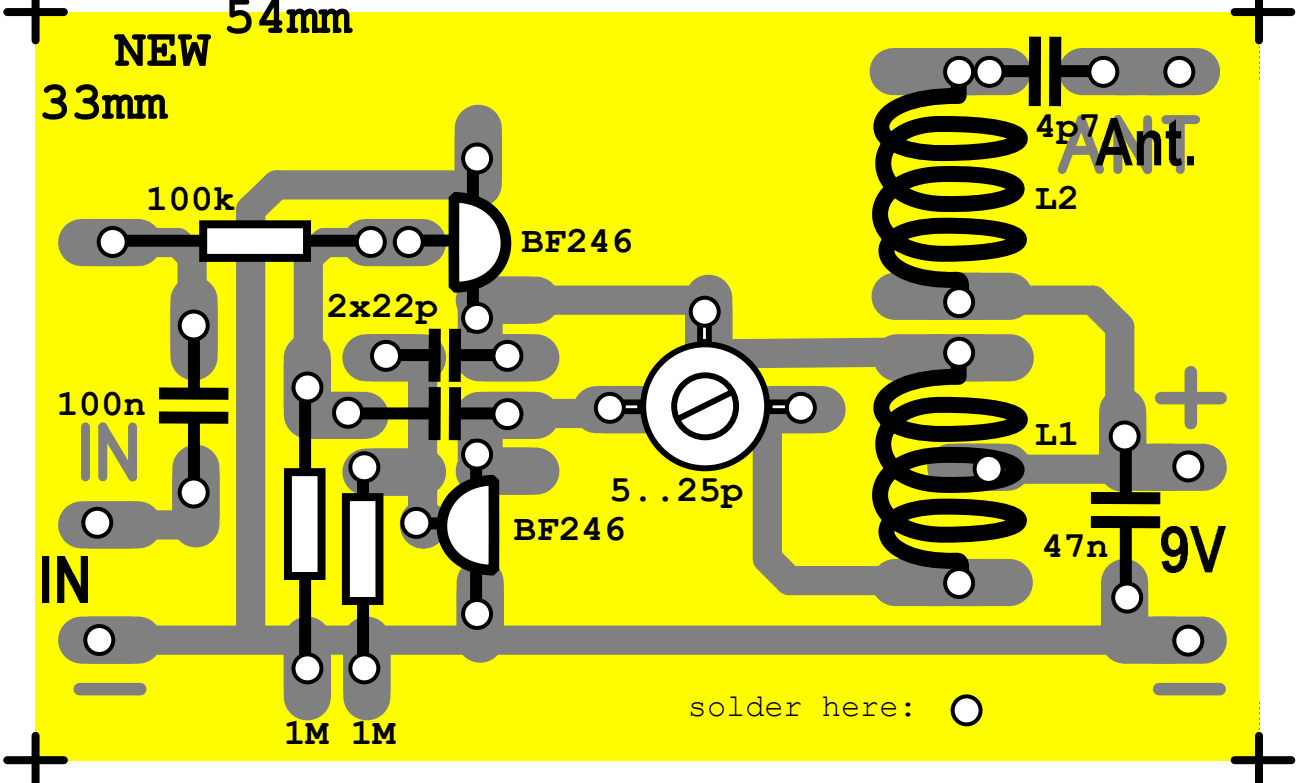

fm-tRANS
PRELIMINARY GRAPH AFTER PIKSEL, Bergen
Jo frgmnt Grys / tob.de.vu / 2008
Transmitting Object Behaviors

creative commons
BY: $ ↻
Creative Commons License: BY-NC-SA v3.0 German

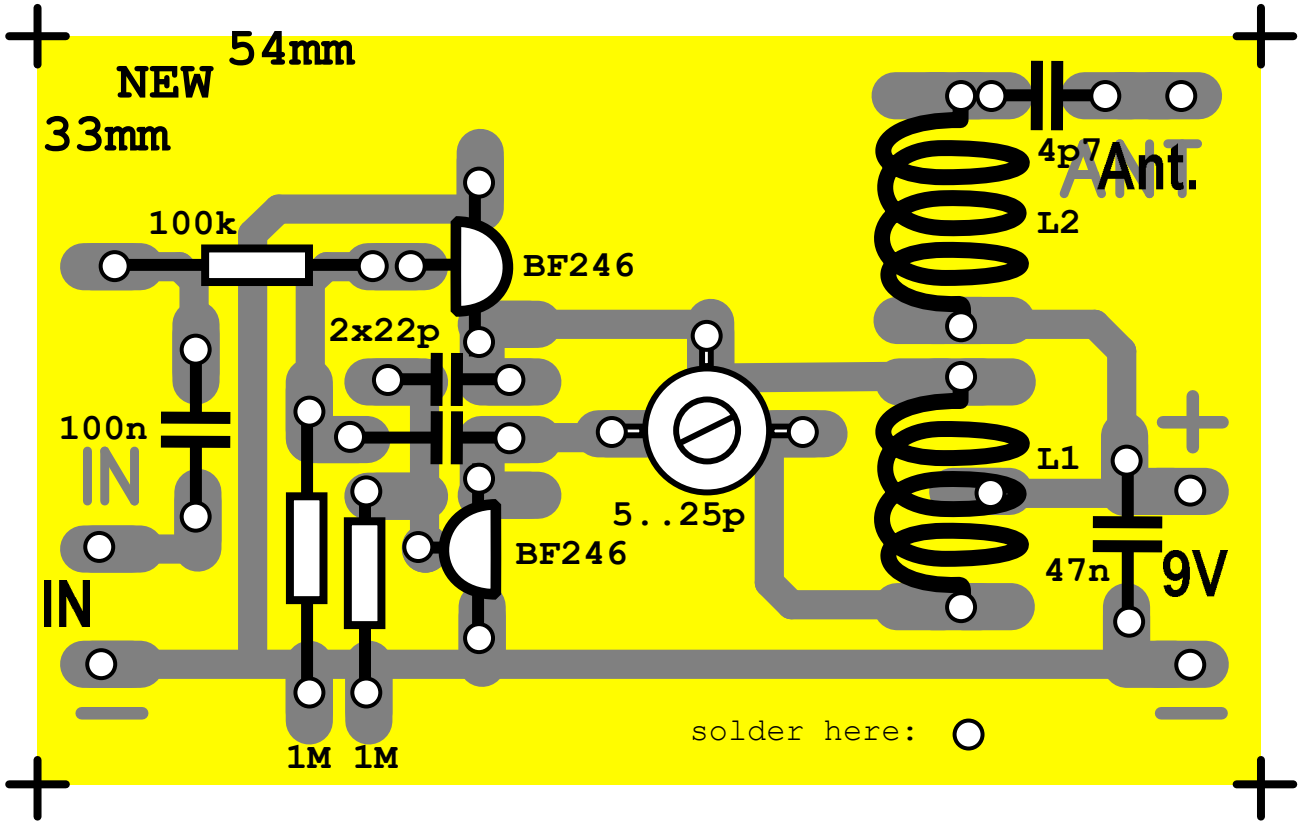

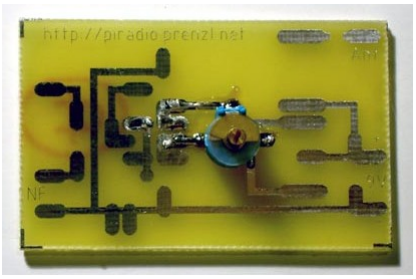

Add the varicap

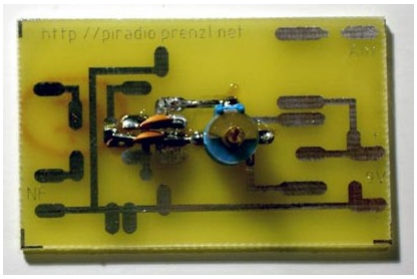

Add two 22p capacitors

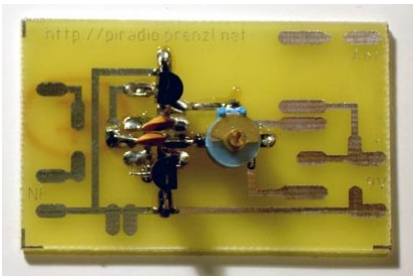

Add two transistors

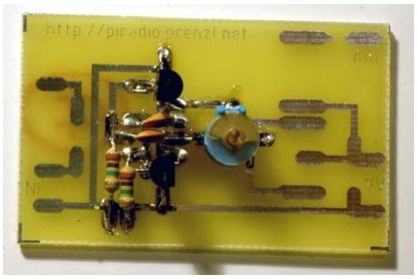

Add two 1M resistors

Add the 100n capacitor

Add the 100k resistor

Add two coils & mid connection

Add the 47n capacitor

Connect both channels, battery- & 70cm of antenna-cable

TIPS: The coils are easily fabricated by winding the silverwire around a 10mm drill bit.. When finished & powered, tune a radio to a noisy space between stations, then tune the transmitter by slowly turning the screw of the varicap with a non-metallic screwdriver until the noise stops. Now you can snip against the coils & tune to a clear radio sound! Increase stability: Use stabilized power for long term frequency stability. Connect rear copper plane to ground. Extend range: With a tuned dipole antenna & strong input signal.